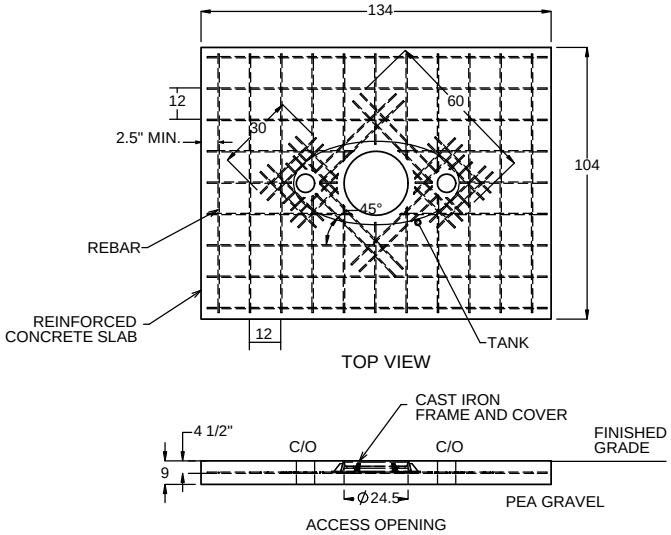

NOTES:

- CONCRETE TO BE 28 DAY COMPRESSIVE STRENGTH TO 4000 PSI
- NO. 4 REBAR (Ø 1/2") GRADE 60 STEEL PER ASTM A615; CONNECTED WITH TIE WIRE
- REBAR TO BE 2.5" FROM FACE OF CONCRETE
- REBAR SPACING 12" GRID, 4" SPACING AROUND ACCESS OPENINGS
- ALL PENETRATIONS TO BE SLEEVED OR HAVE SLIP CONNECTIONS
- MINIMUM 36" FROM TOP OF SLAB TO TOP OF TANK
- EXTEND COMPACTED BACKFILL A MINIMUM 3 FT. BEYOND ALL SIDES OF TANK

H20 TRAFFIC LOADING SLAB

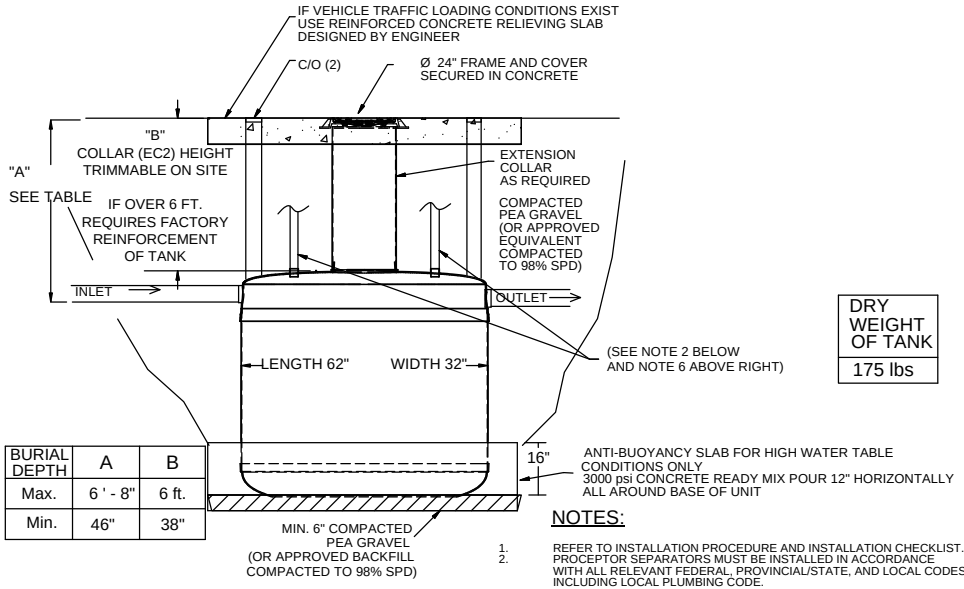

BURIAL DEPTH	A	B
Max.	6 ' - 8"	6 ft.
Min.	46"	38"

DRY WEIGHT OF TANK
175 lbs

NOTES:

1. REFER TO INSTALLATION PROCEDURE AND INSTALLATION CHECKLIST.
2. PROCEPTOR SEPARATORS MUST BE INSTALLED IN ACCORDANCE WITH ALL RELEVANT FEDERAL, PROVINCIAL/STATE, AND LOCAL CODES INCLUDING LOCAL PLUMBING CODE.
3. US PATENT # 5,746,912; CDN PATENT # 2,195,822

INSTALLATION DETAILS

NOTES:

1. FOR GRAVITY APPLICATIONS ONLY.
2. ALL PROCEPTOR UNITS ARE MANUFACTURED WITH FIBERGLASS REINFORCED PLASTICS. PHYSICAL CHARACTERISTICS AND THICKNESS: ISOPHTHALIC POLYESTER RESIN AND E GLASS. MINIMUM THICKNESS OF 1/4" WALL AND 3/8" TOP AND BOTTOM BOWLS. A MINIMUM (EACH) OF 3.5 FT OF COVER AND 1.00% SLOPE IS REQUIRED FOR ALL EXTERIOR 4" OR 6" PIPING. MAXIMUM BURIAL DEPTH = 7 FEET (GRADE TO INVERT OF INLET) FOR DEEPER INSTALLATIONS CALL GREEN TURTLE FOR CUSTOM REINFORCEMENT.
3. ALL PROCEPTOR UNITS ARE TO BE INSTALLED IN ACCORDANCE WITH THE MANUFACTURER'S INSTALLATION INSTRUCTIONS AT LEFT.
4. GMC/OMC 50 -300 UNITS COME STANDARD WITH 4" INLET AND OUTLET (OTHER CUSTOM SIZES AVAILABLE AT EXTRA CHARGE).
5. ALL INTERNAL PIPING IS SCHEDULE 40 PVC. EITHER 4" OR 6" INTERNAL PIPING MAY BE REQUIRED IN FOX METRO'S SERVICE AREA. REFER TO THE APPROVED PLANS FOR SIZING OF THE DOWNSTREAM SEWER SERVICE (4" OR 6"). CONTRACTOR SHALL PROVIDE CONNECTIONS IF APPLICABLE. REFER TO FOX METRO FOR CLEANOUT AND SAMPLE PORT COVER DETAIL.
6. FOR ALL 50-300 GALLON UNTS, IN LIEU OF SEPARATE VENTING, A 1-1/2" HOLE SHALL BE PROVIDED ON EACH INLET/OUTLET BAFFLE, JUST BELOW THE TOP OF THE TANK.
7. EXTENSION COLLAR TO BE ORDERED TO MEET FINISHED GRADE, CUT ON SITE FOR FINAL ADJUSTMENT AND CAULKED WITH SIKAFLEX BY CONTRACTOR FOR REQUIRED WATERTIGHT SEAL.
8. COVERS AVAILABLE FOR H20 TRAFFIC LOADING, PEDESTRIAN LOADING OR ABOVE GROUND INSTALLATION.
9. CONSULT GREEN TURTLE FOR OTHER SIZES.
10. ALL UNITS ARE FACTORY TESTED.
11. 30 YEAR WARRANTY AGAINST LEAKS, AND STRUCTURAL FAILURE.
12. U.S. PATENT # 5,746,912; CND PATENT # 2,195,822.

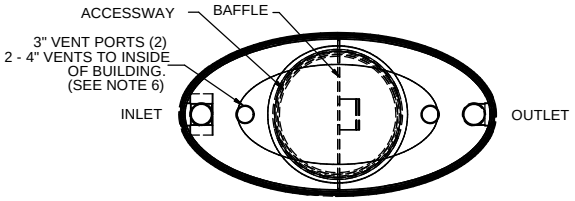

TOP VIEW

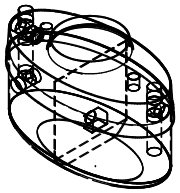

ISOMETRIC VIEW

SIDE VIEW

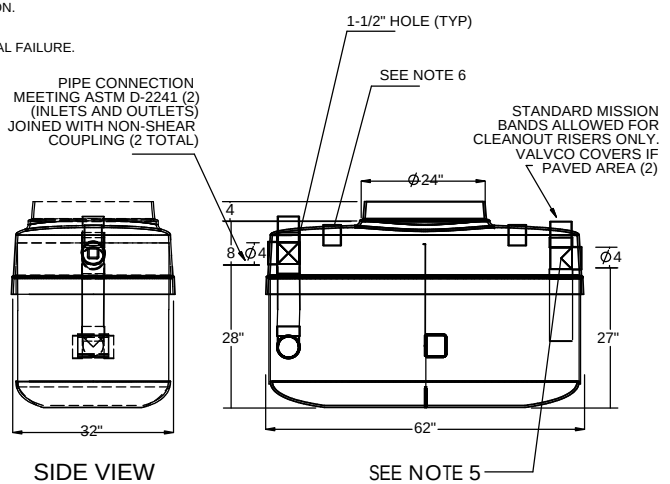

FRONT VIEW

INTERCEPTOR DETAILS

TITLE: PROCEPTOR OIL AND GREASE SEPARATOR
DETAIL AND INSTALL COMPILATION
GMC 150 FM
ALL DIMENSIONS IN INCHES

PROJECT: FOX METRO
WO:

REV	DATE	DRAWN
1	JUNE 28, 2016	
2		
3		
4		
5		
6		
7		
8		
9		
10		

DRAWN BY: S. MANGAT
DRAWN DATE: JUNE 04, 2013

Proceptor®
ZURN®

US 877 428 8187 CAN 877 966 9444
www.greenturtletech.com

SIZE A | DWG. NO. GMC 150 IV FM PACKAGE | REV. 1
SCALE:NTS | DO NOT SCALE DRAWING